PTZH213X23/PTZH213X23-C

720P TVI PTZ Dome Camera

PTZH213X23

PTZH213X23-C

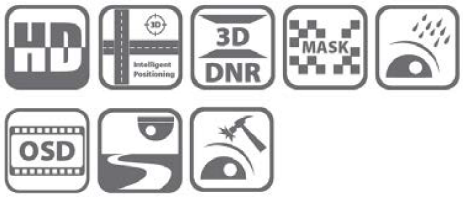

Key features

- 1.3MP CMOS Image Sensor
- 720P Video Output
- Adopts HDTVI Technology
- 23X optical zoom, 16X digital zoom
- OSD Menu via UTC technology
- Privacy Masking, 3D DNR, D-WDR, EIS
- 3D intelligent positioning
- True Day&Night
- 4-inch bubble

Dimensions

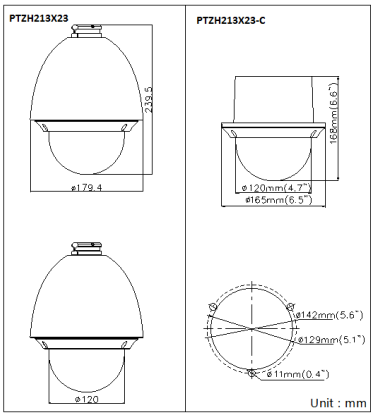

	PTZH213X23/PTZH213X23-C
Camera	
Image Sensor	1 / 3″ Sensor
Max. Image Resolution	1280×720
Resolution	50Hz: 50fps(1280×720), 25fps(1280×720) ; 60Hz: 60fps(1280×720), 30fps(1280×720)
Min. Illumination	Color: 0.05Lux@(F1.6,AGC ON) ; B/W: 0.01Lux@(F1.6,AGC ON)
White Balance	Auto / Manual / ATW / Indoor / Outdoor
AGC	Auto / Manual
S / N Ratio	⩾50dB
3D DNR	Support
Digital WDR	Support
EIS	Support
Backlight Compensation	Support
Shutter Time	1-1/10,000s
Day & Night	IR Cut Filter
Digital Zoom	16x
Privacy Mask	8 privacy masks programmable; a maximum of 8 zones can be masked simultaneously on the same video screen
Focus Model	Auto / Semiautomatic / Manual
Lens	
Focal Length	4-92mm, 23X
Zoom Speed	Approx.3s(Optical Wide-Tele)
Angle of View	49-2.2 degree(Wide-Tele)
Min. Working Distance	10-1000mm (Wide-Tele)
Aperture	F1.6-F3.7
Pan and Tilt	
Pan Range	360° endless
Pan Speed	Pan Manual Speed: 0.1° -160° /s , Pan Preset Speed: 160° /s
Tilt Range	0° -90° (Auto Flip)
Tilt Speed	Tilt Manual Speed: 0.1° -120° /s , Tilt Preset Speed: 120° /s
Proportional Zoom	Rotation speed can be adjusted automatically according to zoom multiples
Number of Preset	256
Patrol	8 patrols, up to 32 presets per patrol
Pattern	4 patterns, with the total recording time not less than 10 minutes
Power-off Memory	Support
Park Action	Preset / Patrol / Pattern / Pan scan / Tilt scan / Frame Scan / Random scan / Panorama scan
PTZ Position Display	On/Off
Preset Freezing	Support
Scheduled Task	Preset / Patrol / Pattern / Pan scan / Tilt scan / Frame Scan / Random scan / Panorama scan
RS-485 communication diagnosis	Support
Input / Output	
Video Output	1 CVBS output, 1 HD TVI Output
Alarm Input	2
Alarm Output	1
RS-485 Interface	Half-duplex mode , Pelco-P, Pelco-D protocol
UTC function	Self-adaptive PELCO_C
General	
Menu Language	English
Power	24 VAC , PTZH213X23: Max.18 W(heater: 6W) , PTZH213X23-C: Max.12W
Working Temperature / Humidity	-22° F-149° F(-30 ° C-65° C)(PTZH213X23) /14° F-122° F(-10° C-50° C)(PTZH213X23-C) ; 90% or less
Protection Level	IP66 standard (PTZH213X23) ; TVS 4,000V lightning protection, surge protection and voltage transient protection
Dimensions	Φ7.06″ ×9.43″ (Φ179.4×239.5mm)(PTZH213X23) Φ6.50″ ×6.61″ (Φ165×168mm) (PTZH213X23-C)
Weight (approx.)	4.41lbs (2Kg) (PTZH213X23) 4.41lbs(2Kg) (PTZH213X23-C)