# Quick Installation Guide

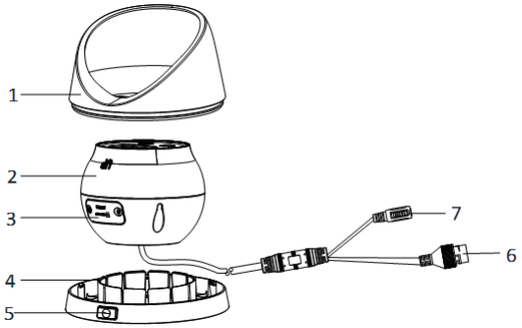


| No. | Description |
|---|---|
| 1 | Enclosure |
| 2 | Camera |
| 3 | Memory Card Slot |
| 4 | Mounting Base |
| 5 | Lock Button |
| 6 | Network Interface |
| 7 | Power Interface |

**Note:**
Press RESET about 10 s when the camera is powering on or rebooting to restore the default settings, including the user name, password, IP address, and port No., etc.

## Installation Steps:

**1. Push the lock button to remove the bottom base.**

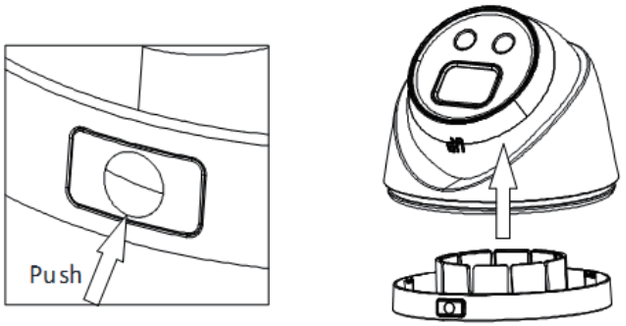


**2. Loosen the screws to remove the memory card slot cover.**
**3. Insert the memory card into the slot.**

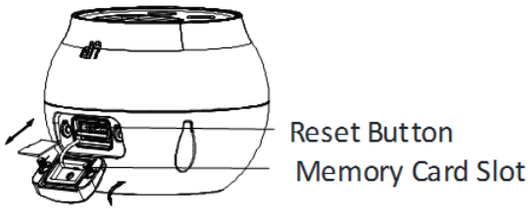


**4. Replace the slot cover with the screws.**
**5. Drill the screw holes and the cable hole on the ceiling according to the drill template.**

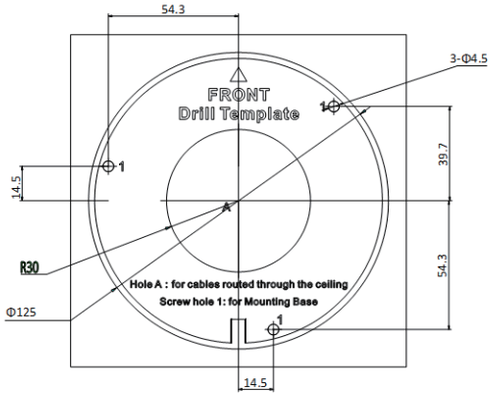


**6. Fix the mounting base to the ceiling with the screws.**

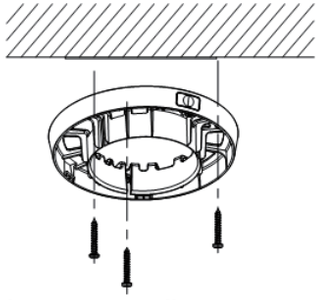

**7. Connect the corresponding power and network cables.**
**8. Install the camera to the mounting base with the screws.**

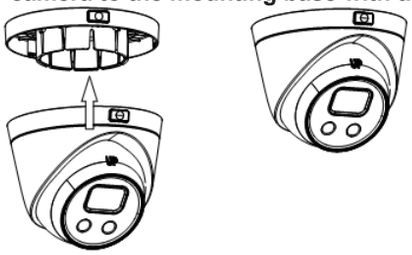

**9. Adjust the Lens.**

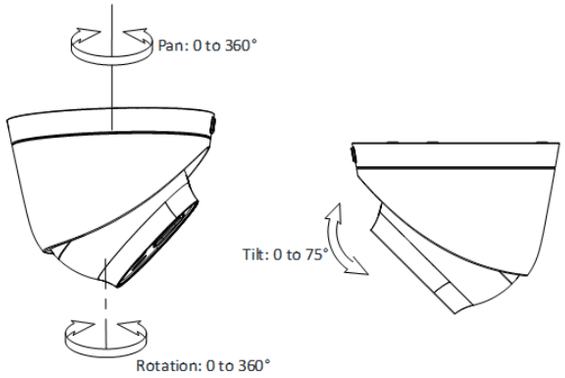


For detailed instructions of further configuration, please refer to the user manual of network camera.