8MP Dual light Lite
Fixed Bullet Network Camera

LXIP8582WE-28MDA



Key Features

- Max.8MP Resolution
- Maximum 20fps at 8MP (3840*2160)
- 1/2.7" CMOS and F1.6 aperture
- Built-in warm white light and IR light, and the max. illumination distance is 100 ft
- VCA with Line Crossing and Intrusion by AI algorithm
- MD2.0 focus on Human and Vehicle
- Built in MIC
- Built-in Micro SD card slot, up to 256 GB
- 12V DC and PoE
- IP67

Specification

Camera	
Image Sensor	1/2.7" CMOS
Min. Illumination	0.007 Lux at F1.6 (Color), 0.0007 Lux at F1.6(B/W)
E-shutter Speed	Auto/Manual 1/3 s–1/100,000 s
S/N Ratio	> 56 dB
Noise Reduction	3D NR
Wide Dynamic Range	120 dB
Day & Night	Color/B/W
Angle Adjustment	Pan and Rotation: 0°-360° Tilt: 0°-90°
Lens Type	Fixed-focal 2.8mm at F1.6
Iris Type	Fixed
Field of View	Horizontal: 110°, Vertical: 58°, Diagonal: 132°
Close Focus Range	4.92 ft (1.5 m)
DORI	Detect: 277.23 ft (84.5 m) Observe: 110.27 ft (33.6 m) Recognize: 54.46 ft (16.6 m) Identify: 27.23 ft (8.3 m)
Illuminators	2 x Warm white Lights, 2 x IR Lights
Illumination Range	Up to 100 ft
Illuminator Control	Auto, Manual, Off
Video	
Video Compression	H.265, H.264, MJPEG (Sub Stream Only)
Resolution	8MP (3840*2160), 6MP (3072*2048), 5MP (3072*1728), 5MP (2880*1620), 4MP (2688*1520), 3MP (2048*1536), 3MP (2304*1296), 1080P (1920*1080), 1.3MP (1280*960), 720P (1280*720), D1 (704*480), VGA (640*480), CIF (352*240)
Maximum Frame Rate	Main stream: 8MP (3840*2160) at 20 fps, 4MP (2688*1520) / 30 fps Sub stream: D1 (704*576) / 30 fps
Video Stream	2 streams
Bit Rate Control	CBR, VBR
ROI	Supported (4 areas)
Image Rotation	0°, 90°, 180° and 270° (90° and 270° only for 2688*1520 resolution and lower)
Mirror	Supported
Privacy Mask	Supported (4 areas)
Audio	
Built-in MIC	Yes
Audio Compression	PCM, G.711a, G.711Mu
Intelligent Analysis	
VCA (Video Content Analytics)	Intrusion, Line Crossing
MD2.0	Supported
Event	
Alarm Event	Line Crossing, Intrusion, Motion Detection, MD2.0, Audio Detection, Video Tampering, Disk Full, Disk Error, Offline, IP conflict, Voltage Detection, Security Warning
Network	
Protocol	IPv4, IPv6, DNS, TCP, UDP, DHCP, HTTP, HTTPS, 802.1X, RTSP, DDNS, P2P, SMTP, RTMP, PPPoE, UPnP, Bonjour, QoS, Auto Registration, ICMP, IGMP, FTP, SFTP, RTP, RTCP, ARP, NTP, Multicast, NFS
Interoperability	ONVIF (Profile S & Profile G & Profile T), CGI

Storage	FTP, SFTP, Micro SD card (support max. 256 GB), NAS
Web Browser	Chrome, Firefox
PC client	X Station
Mobile APP	Pro-X Next
Interface	
Network port	RJ-45 (10/100 Base-T)
Micro SD card Slot	Yes
Reset Button	Supported
General	
Power Supply	12 VDC / PoE (802.3af)
Power Consumption	12 VDC: Max 5.5W, Typical 2.0W / PoE: Max 7.2W, Typical 3.0W
Housing	Metal
Dimensions	8.67" x 3.44" x 3.1" (220.1 mm x 87.4 mm x 78.8 mm) (L*W*H)
Dimension With Box	9.88" × 5.35" × 4.41"(251mm × 136 mm × 112 mm) (L*W*H)
Operating Conditions	-40°C to +60°C (-40°F to +140°F)/less than 95% RH
Storage Conditions	-40°C to +60°C (-40°F to +140°F)
Protection Grade	IP67
Net Weight	1.33lb (602g)
Gross Weight	1.81lb (821g)
Certification	FCC, IC

Dimensions (mm[inch])

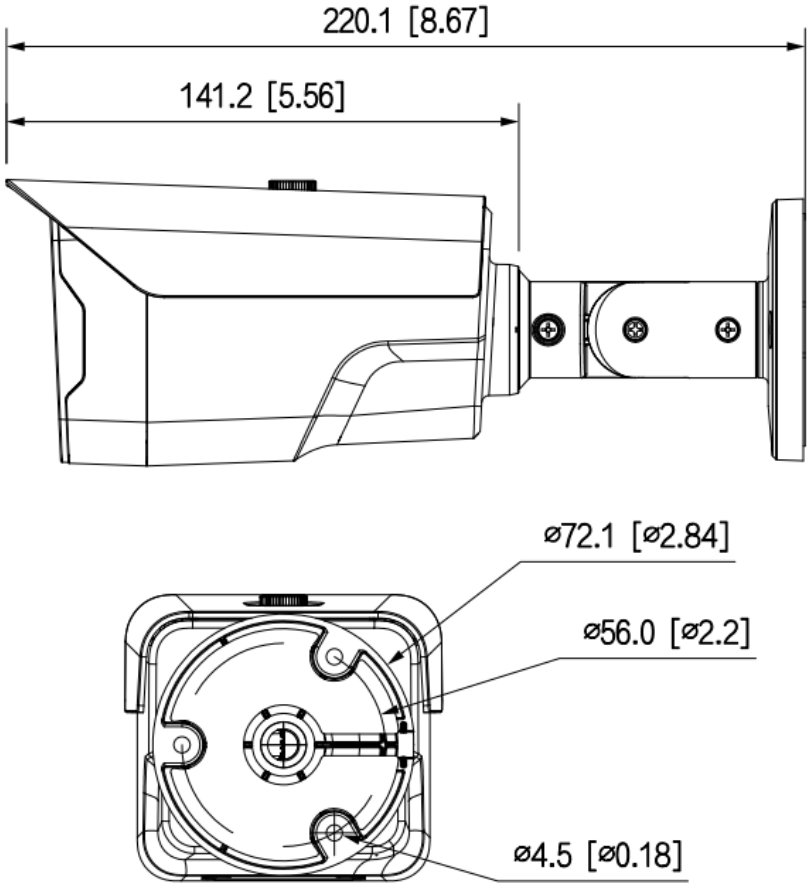

Accessories

LXKJB01(1) &LXKJB01(2) Junction Box	LXKJB01(1) &LXKJB01(2) &LXPM01 Pole Mount (Vertical)	LXKJB01(1) &LXKJB01(2) LXCM01 Corner Mount
		