2 x 4MP Active Deterrence Stiched Turret Camera

LXIP3CX8PWI-LAISP



Key Features

- Max. 8MP (4320 × 1944) Resolution
- Dual 1/2.7” Starlight CMOS image sensor, F1.4 Aperture
- Built-in 4x multi-core lights (IR + White light); max. IR distance: 100 ft, max. white light distance: 100 ft
- 120 dB True WDR
- MD2.0
- VCA: Intrusion, line crossing, stay detection, loitering detection
- E-Tracking
- X-SEARCH
- Face detection
- PRO-X Large Vision Model(PRO-X VLM)
- Sound and light alarm (red and blue lights)
- Built-in dual MICs and Speaker, support two-way talk
- Support Alarm and Audio interface
- Built-in Micro SD card slot, up to 512 GB
- 12 VDC / PoE
- IP67

Specification

Camera	
Image Sensor	Dual 1/2.7” 4Megapixel progressive CMOS
Min. Illumination	• 0.0001 lux@F1.4 (Color, 30 IRE) • 0.0003 lux@F1.4 (B/W, 30 IRE) • 0 lux (Illuminator on)
E-shutter Speed	Auto/Manual: 1/3 s–1/100,000 s
S/N Ratio	> 56 dB
Noise Reduction	3D NR
Wide Dynamic Range	120 dB
Day & Night	Auto, Color, B/W
Angle Adjustment	Pan: 0°–360°, Tilt: 0°–77°, Rotation: 0°–360°
Lens Type	Fixed, 2.8 mm@F1.4
Iris Type	Fixed
Field of View	Horizontal:180°, Vertical: 72°
Close Focus Range	2.62 ft (0.8 m)
DORI	• Detect: 166 ft (50.6 m) • Observe: 66 ft (20.1 m) • Recognize: 33 ft (10.1 m) • Identify: 17 ft (5.2 m)
Illuminators	4x multi-core lights (IR + White light)
Illumination Range	IR: Up to 100 ft (30 m), White light: Up to 100 ft (30 m)
Illuminator Control	Auto/Manual
Video	
Video Compression	H.265, H.264, MJPEG (only supported by sub stream)
Resolution	8MP (4320 × 1944/4096 × 1860), 1920 × 860, 1200 × 536, 960 × 432, D1 (704 × 576/704 × 480)
Frame Rate	• Main stream: 4320 × 1944@ (1–20 fps) • Sub stream: 1200 × 536@ (1–20 fps) • Third stream: 1920 × 860@ (1–20 fps)
Video Stream	3 streams
Bit Rate Control	CBR, VBR
ROI	Supported (4 areas)
Privacy Mask	Supported (8 areas)
Defog	Supported

Audio	
Built-in MIC	Supported Dual MICs
Built-in Speaker	Yes
Audio Compression	PCM, G.711a, G.711u, G.726, G.723
Intelligent Analysis	
VCA	Line Crossing, intrusion (Support the classification and accurate detection of vehicle and human), stay detection, loitering detection
MD2.0	Yes, support alarm triggered by vehicle and human
E-Tracking	Supported. (Need work with specific NVRs)
X SEARCH	Supported.
Face Detection	Supported.
PRO-X Large Vision Model(PRO-X VLM)	Supported.
Event	
Alarm Event	No SD card, SD card full, SD card error, network disconnection, IP conflict, illegal access, motion detection, video tampering, voltage detection, security exception, scene changing, audio detection, external alarm
Network	
Protocol	IPv4, IPv6, HTTP, TCP, UDP, ARP, RTP, RTSP, RTCP, RTMP, SMTP, FTP, SFTP, DHCP, DNS, DDNS, QoS, UPnP, NTP, Multicast, ICMP, IGMP, NFS, SAMBA, PPPoE, SNMP, P2P, Bonjour, Auto Registration
Interoperability	ONVIF (Profile S & Profile G & Profile T & Profile M), CGI
Storage	FTP, SFTP, Micro SD Card (support max. 512 G), NAS
PC Client	X STATION
APP	Pro-X NEXT
Interface	
Audio I/O	1 × Input, 1 × Output (RCA)
Alarm I/O	1 × Input (5 mA, 3–5 VDC), 1 × Output (1000 mA, 30 VDC / 500 mA, 50 VAC)
Reset Button	Supported
Network port	RJ-45 (10/100/1000 Base-T)
General	
Power Supply	12 VDC (±30%), PoE+ (802.3at)
Power Consumption	12 VDC: Max 12.2 W, Typical 4.1 W / PoE: Max 14.8 W, Typical 5.6 W
Housing Material	Metal
Dimensions	5.83'' × Φ5.63'' (148.1 mm × Φ143mm)
Dimensions With Box	7.32" × 7.28" × 7.09" (186.0 mm × 185.0 mm × 180.0 mm) (L × W × H)

Operating Conditions	–40°F to +140°F (–40°C to +60°C)/less than 95% RH
Storage Conditions	–40°F to +140°F (–40°C to +60°C)
Protection Grade	IP67
Net Weight	2.38 lb (1079 g)
Certification	FCC

Dimensions

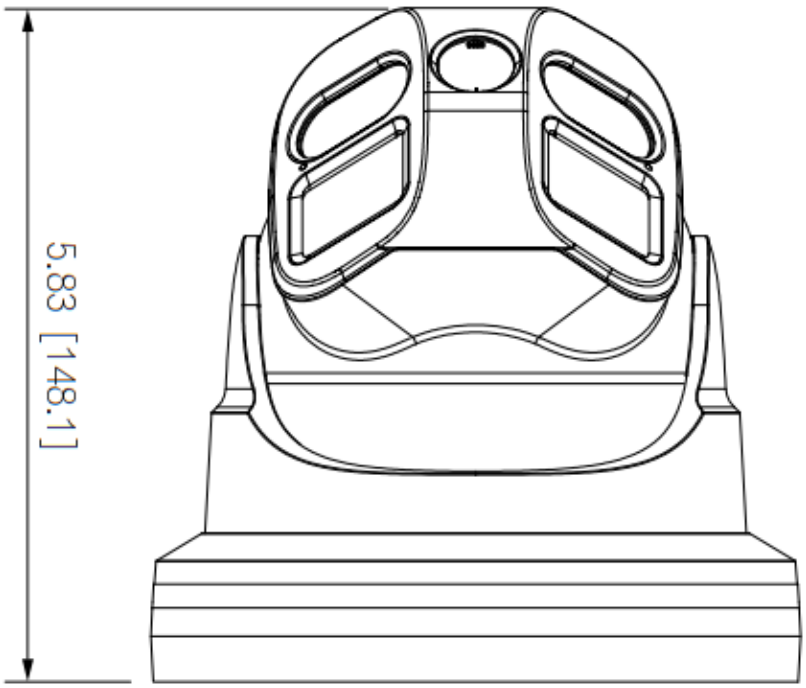

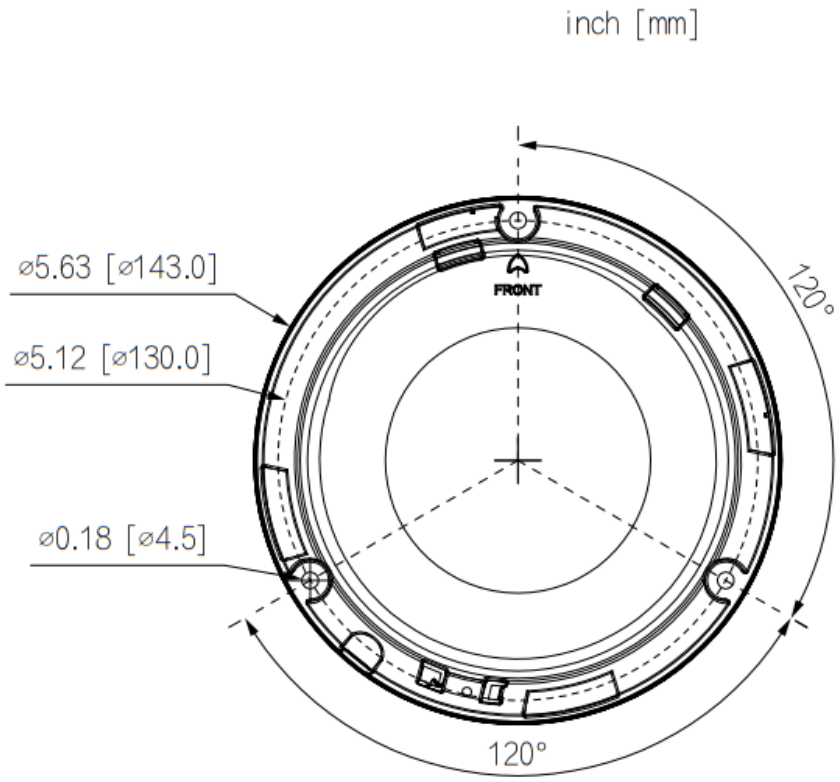

Accessories

Junction Mount	Wall Mount	Pendant Mount	Vertical Pole Mount
LXKJB05	LXWM05	LXPD05+LXPD03	LXWM05+LXPM01
